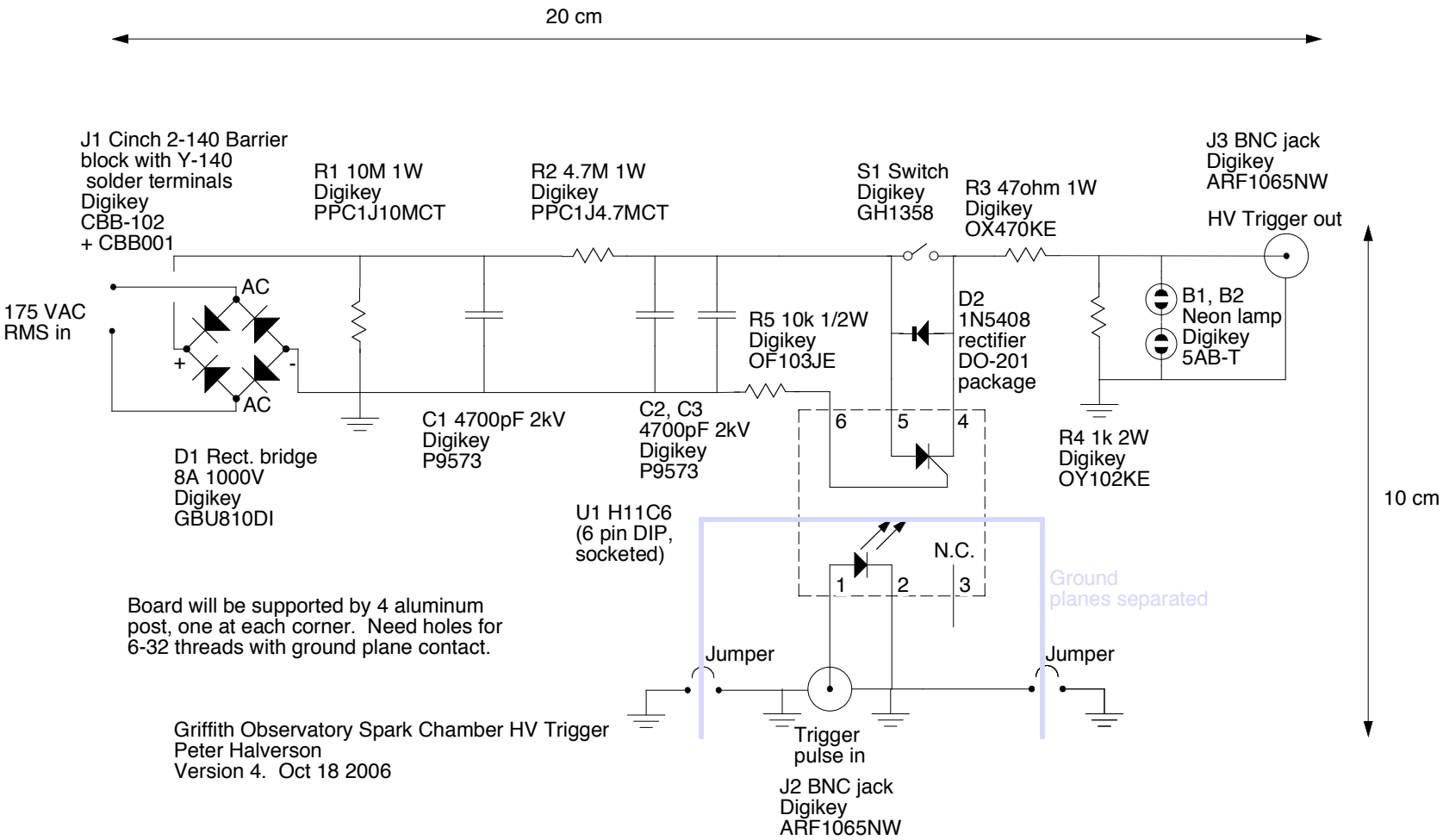
20 cm
J1 Cinch 2-140 Barrier block with Y-140 solder terminals Digikey CBB-102 + CBB001
R1 10M 1W Digikey PPC1J10MCT
R2 4.7M 1W Digikey PPC1J4.7MCT
S1 Switch Digikey GH1358
R3 47ohm 1W Digikey OX470KE
J3 BNC jack Digikey ARF1065NW
HV Trigger out
175 VAC RMS in
AC
AC
+
-
D1 Rect. bridge 8A 1000V Digikey GBU810DI
C1 4700pF 2kV Digikey P9573
C2, C3 4700pF 2kV Digikey P9573
R5 10k 1/2W Digikey OF103JE
D2 1N5408 rectifier DO-201 package
B1, B2 Neon lamp Digikey 5AB-T
R4 1k 2W Digikey OY102KE
10 cm
U1 H11C6 (6 pin DIP, socketed)
6
5
4
1
2
3
N.C.
Ground planes separated
Board will be supported by 4 aluminum post, one at each corner. Need holes for 6-32 threads with ground plane contact.
Jumper
Jumper
Trigger pulse in
J2 BNC jack Digikey ARF1065NW
Griffith Observatory Spark Chamber HV Trigger
Peter Halverson
Version 4. Oct 18 2006